Docusign Envelope ID: ECA045CC-BA48-4900-A3A2-086C61F21487

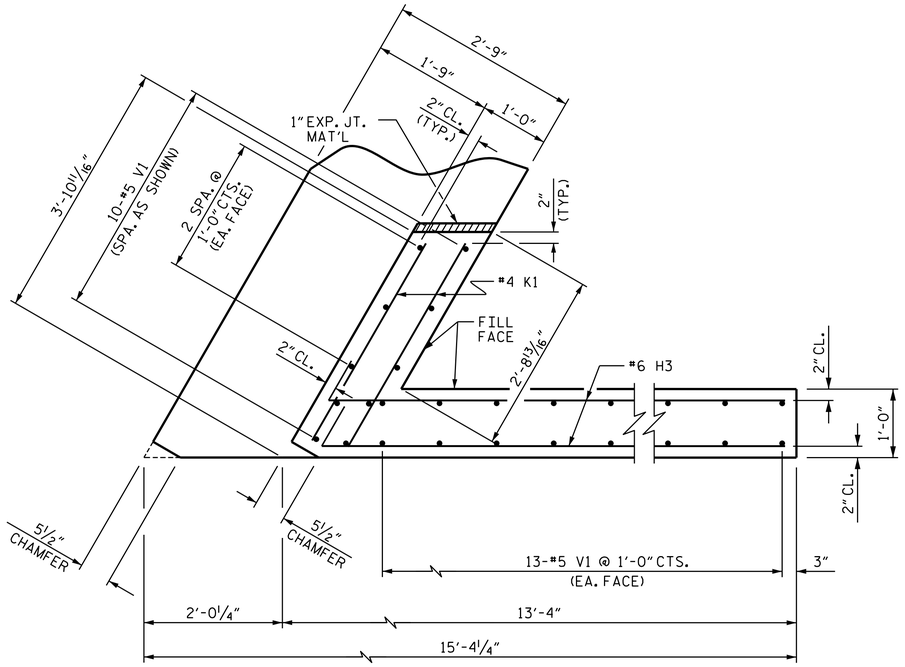

PLAN OF WING (W1)

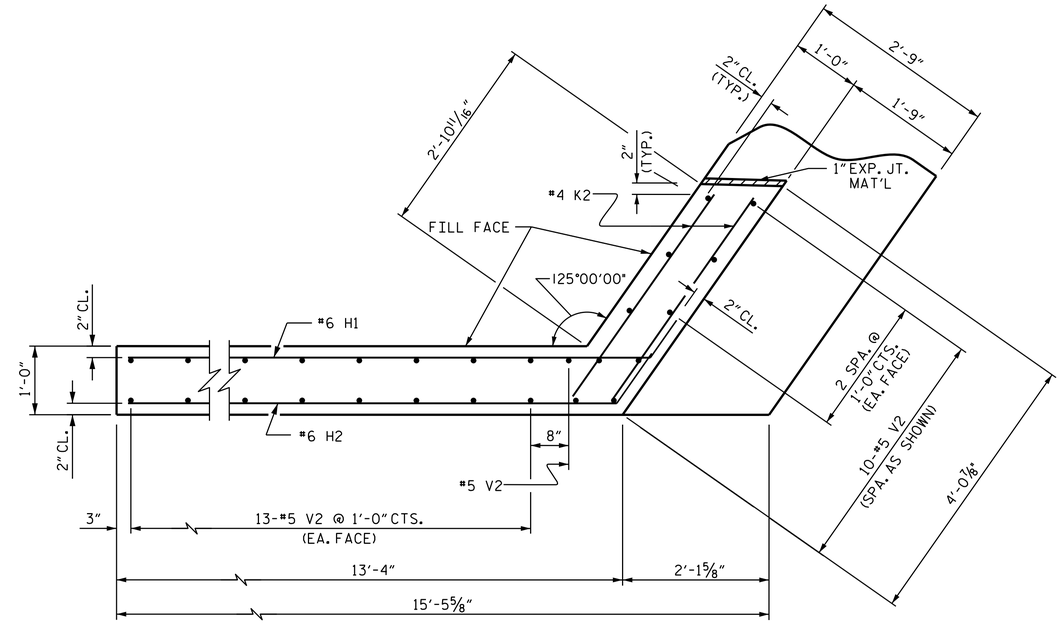

PLAN OF WING (W2)

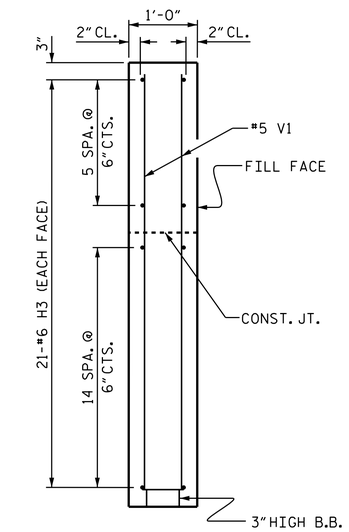

SECTION X-X

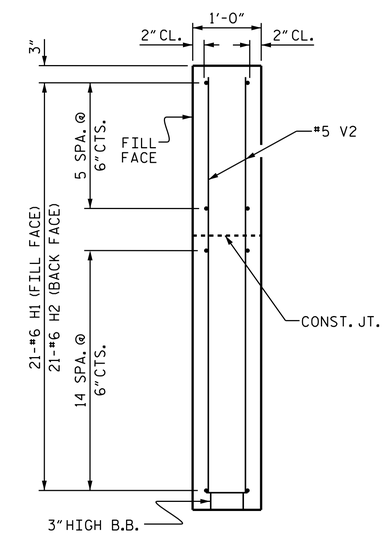

SECTION Y-Y

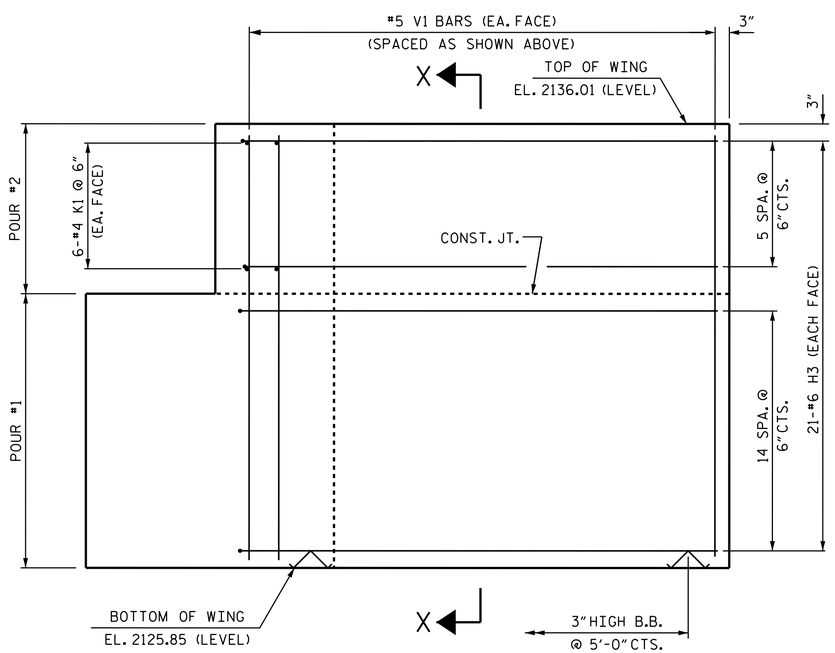

ELEVATION OF WING (W1)

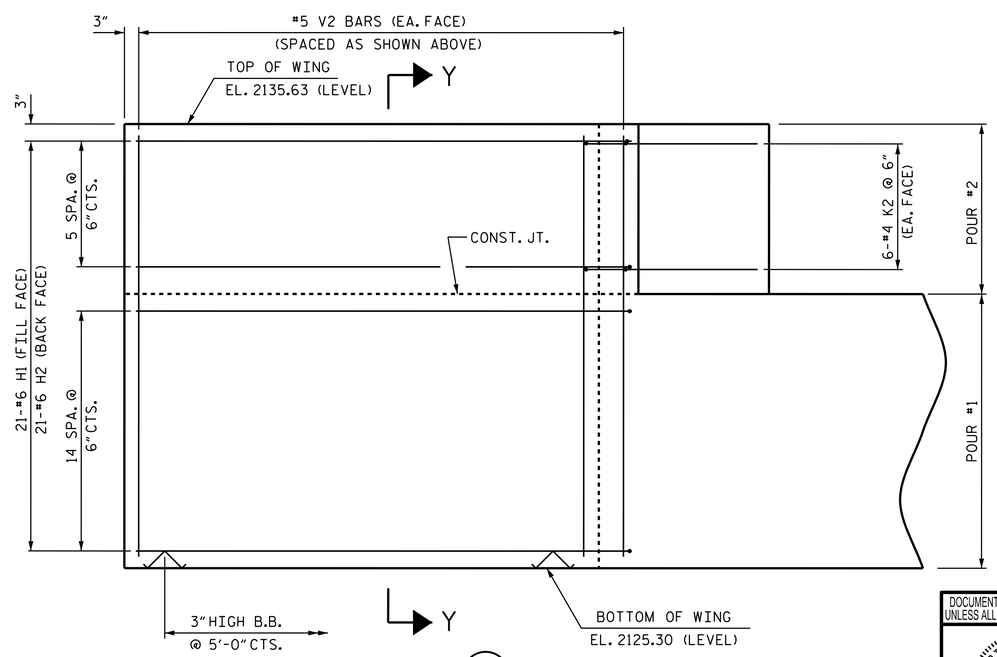

ELEVATION OF WING (W2)

WING DETAILS

DESIGNED BY:	E. LAWES	DATE :	NOV 2023
DRAWN BY:	J. WHEATLEY	DATE :	NOV 2023
CHECKED BY:	T. KIRSCHBAUM	DATE :	NOV 2023
DESIGN ENGINEER OF RECORD:	E. LAWES	DATE :	JUNE 2024

WSP USA Inc.
434 FAYETTEVILLE STREET
SUITE 1500
RALEIGH, NC 27601
TEL: 1.919.836.4040

LICENSE NO. F-0165

DOCUMENT NOT CONSIDERED FINAL UNLESS ALL SIGNATURES COMPLETED

NORTH CAROLINA PROFESSIONAL SEAL 044167 ENGINEER ELIZABETH F. LAWES
7/19/2024
DocuSigned by: Elizabeth F. Lawes
935E84223CD547C...

PROJECT NO. BP14-R010
CLAY COUNTY
STATION: 12+60.00 -L-

SHEET 2 OF 3

STATE OF NORTH CAROLINA
DEPARTMENT OF TRANSPORTATION
RALEIGH

SUBSTRUCTURE

END BENT 1
WING DETAILS

REVISIONS								SHEET NO.
NO.	BY:	DATE:	NO.	BY:	DATE:			S-11
1			3					TOTAL SHEETS
2		17	4					17

6/19/2024
\\USRAG100CIFS01\Jobs\188360C - 2015 W Divisions Planning & Design On-Call\I188360C Group 3 Bridges\17BP.R168.210079\Structures\2.0 Drafting\DGNs\401_021_BP14.R010_SMU_EB102.dgn
USEL722989